U-LITE

Technical Specification

Product Code: OV80122MWEM

Description: 41W 1200mm Linear Utility LED Light With Microwave & Emergency - IP65

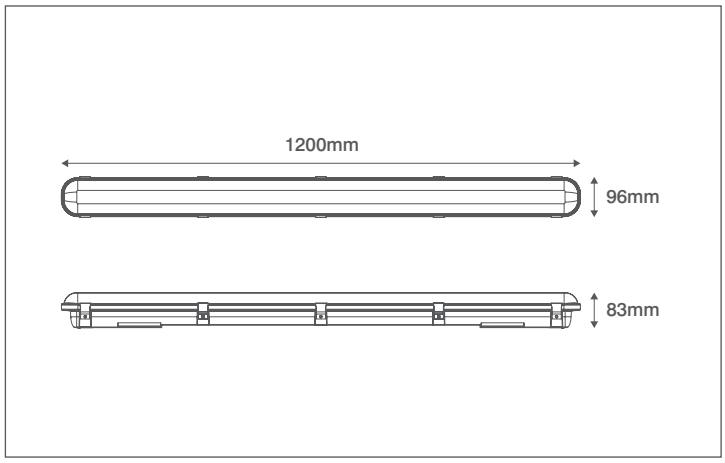

General Information

Dimensions	1200mm (L) x 96mm (W) x 83mm (D)
Materials	Base: Polycarbonate Frosted Diffuser: Polycarbonate
Base Finish	Light Grey
Product Weight	1.91Kg
Dimmable	No
Ingress Protection	IP65
IK Rating	IK08
Mounting	Ceiling, Wall or Suspended
Warranty	5 Years (4 Years Battery)

Accessories

OVEMB6415LIS	6.4V 1500mAh LiFePo4 Battery - Serial
OV80121EM	

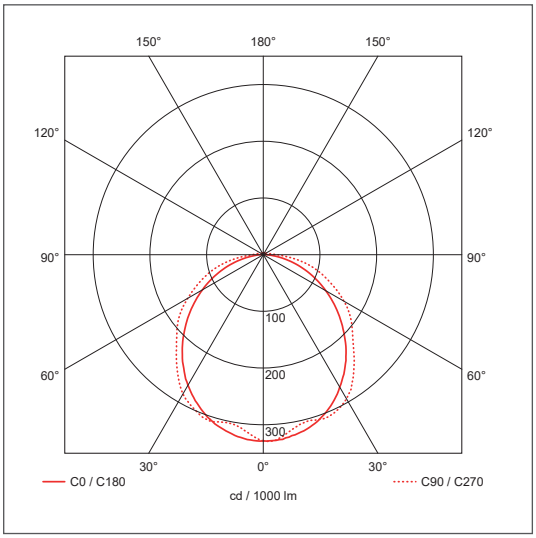

Supply & Power

Input Voltage & Frequency	230V~ 50Hz
Electrical Safety	Class I
Input Power	41W
Input Current	115mA
Inrush Current	3A (264ms)
Power Factor	>0.9
Ambient Temperature (Ta)	0°C - +40°C
Critical Temperature	+90°C
Terminations	5 Pole Push Fit Terminal Block
Cable Input Component	20mm IP68 Nylon Gland Supplied
Fixing Components	Surface and Suspension Brackets Supplied

Luminaire Output

Colour Temperature	4000K
CRI	>80
Typical Luminous Flux	4680lm
Efficacy	114lm/W
Beam Angle	105°
LED Lifetime (L70)	50,000 Hours
Fixing Components	Surface and Suspension Brackets Supplied

Emergency Information

Installation Requirements	Can bewired as maintained or non-maintained
Battery Specification	6.4V 1500mAh LiFePo4
Emergency Duration	3 Hours Minimum
Battery Warranty	4 Years
Emergency Light Level	200lm

IP65

OVIA Limited, 1 Scolmore Park, Landsberg, Lichfield Road Industrial Estate,
Tamworth, Staffordshire, B79 7XB United Kingdom
T: +44 (0)1827 300640
E: sales@oviaUK.com | **W:** oviaUK.com

Errors & Omissions excluded.
Specification is subject to change without notice.