U-LITE

Technical Specification

Product Code: OV80182MW **Description:** 70W 1800mm Linear Utility LED Light With Microwave - IP65

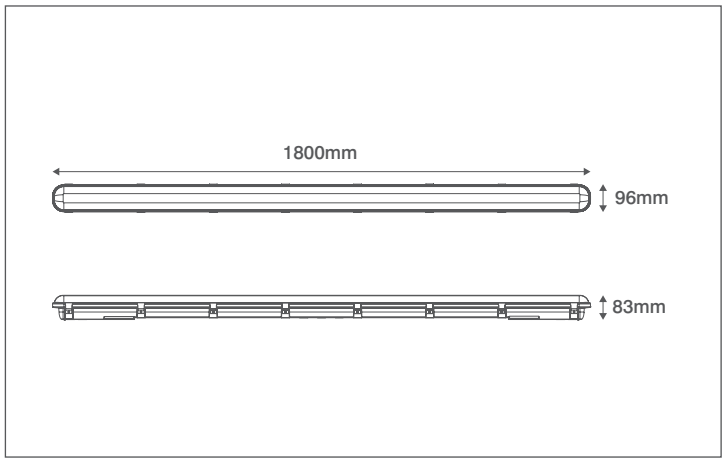

General Information

Dimensions	1800mm (L) x 96mm (W) x 83mm (D)
Materials	Base: Polycarbonate Frosted Diffuser: Polycarbonate
Base Finish	Light Grey
Product Weight	2.42Kg
Dimmable	No
Ingress Protection	IP65
IK Rating	IK08
Mounting	Ceiling, Wall or Suspended
Warranty	5 Years

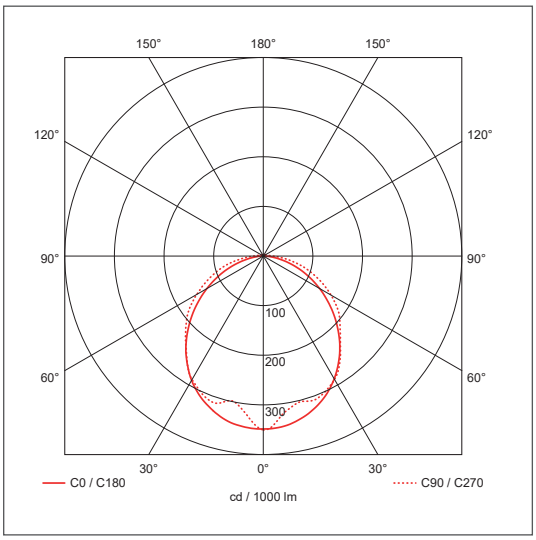

Supply & Power

Input Voltage & Frequency	230V~ 50Hz
Electrical Safety	Class I
Input Power	70W
Input Current	350mA
Inrush Current	4A (94ms)
Power Factor	>0.9
Ambient Temperature (Ta)	-20°C - +40°C
Critical Temperature	+90°C
Terminations	5 Pole Push Fit Terminal Block
Cable Input Component	20mm IP68 Nylon Gland Supplied
Fixing Components	Surface and Suspension Brackets Supplied

Luminaire Output

Colour Temperature	4000K
CRI	>80
Typical Luminous Flux	8400lm
Efficacy	120lm/W
Beam Angle	105°
LED Lifetime (L70)	50,000 Hours
Fixing Components	Surface and Suspension Brackets Supplied

Microwave Information

Mounting Height	6M (Ceiling), 3M (Wall) (Recommended)
Detection Angle	30° - 150°
Detection Range	14M (Ceiling), 10M (Wall)
Detection Area	10% / 50% / 75% / 100% (DIP Switch Setting)
Hold Time	5s / 90s / 5min. 15min. (DIP Switch Setting)
Daylight Threshold	2Lux / 10Lux / 50Lux / Disable (DIP Switch Setting)
HF System	5.8GHz ±75MHz

IP65 WARRANTY 5 YEAR MICROWAVE SENSOR

OVIA Limited, 1 Scolmore Park, Landsberg, Lichfield Road Industrial Estate,
Tamworth, Staffordshire, B79 7XB United Kingdom
T: +44 (0)1827 300640
E: sales@oviaUK.com | **W:** oviaUK.com

Errors & Omissions excluded.
Specification is subject to change without notice.