CALVEX

Technical Specification

Product Code: OVEM5311WHD **Description:** 4W Emergency LED Box Maintained Sign - White - Down Legend

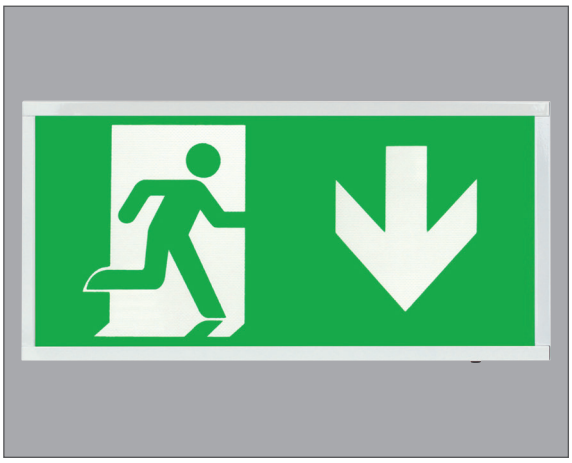

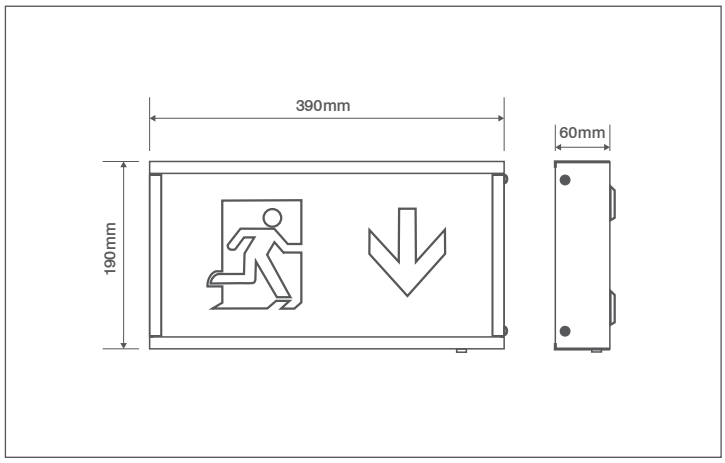

General Information

Dimensions	390mm (W) x 190mm (H) x 60mm (D)
Materials	Housing: Powdercoated Steel Sign: Acrylic
Finish	White
Weight	1.5Kg
Ingress Protection	IP20
Warranty	4 Years

Luminaire Output

Colour Temperature	5500K
LED Lifetime (L70)	30,000 Hours
Beam Angle	100°
Typical Luminous Flux	45lm
Emergency Luminous Flux	40lm
Viewing Distance	34 Metres
Legend Direction	Down

Supply & Power

Input Voltage & Frequency	220-240V~ 50/60Hz
Electrical Safety	Class I
Input Power	4W
Operation Mode	Maintained or Non-maintained
Ambient Temperature (Ta)	0°C - +40°C
Critical Temperature	+70°C
Cable Entry	2 x 20mm Diameter Knockouts

Emergency Information

Emergency Duration	3 hours minimum
Charging Time	24 Hours
Battery Specification	3.6V 1500mAh Ni-Cd Battery - Parallel

Replacement Battery

OVEMB3615NCP	3.6V 1500mAh Ni-Cd Battery - Parallel

IP20

OVIA Limited, 1 Scolmore Park, Landsberg, Lichfield Road Industrial Estate,
Tamworth, Staffordshire, B79 7XB United Kingdom
T: +44 (0)1827 300640
E: sales@oviaUK.com | **W:** oviaUK.com

Errors & Omissions excluded.
Specification is subject to change without notice.